THIS COPY IS PROVIDED ON A RESTRICTED BASIS AND IS NOT TO BE USED IN ANY WAY DETRIMENTAL TO THE INTERESTS OF PANDUIT CORP.

PANDUIT PART #	STUD SIZE	DIMENSIONS in. [mm]				
		L ± .02 [0,5]	W ± .01 [0,3]	C ± .02 [0,5]	M ± .02 [0,5]	H ± .01 [0,3]
E10-6LFB	#6	.77 [19,6]	.30 [7,6]	.23 [5,8]	.53 [13,5]	.14 [3,6]
E10-8LFB	#8	.79 [20,1]	.30 [7,6]	.23 [5,8]	.53 [13,5]	.16 [4,1]
E10-10LFB	#10	.79 [20,1]	.34 [8,6]	.23 [5,8]	.53 [13,5]	.19 [4,8]
E10-14LFB	1/4"	.92 [23,4]	.46 [11,7]	.33 [8,4]	.63 [16,0]	.25 [6,4]

UL & CSA TOOLS
CT-100A CT-200 CT-600-A (CT-570CH) CT-1570 CT-1701 (P10) CT-2500 (CT-2570CH)

PANDUIT APPROVED TOOLS
CT-160 CT-260

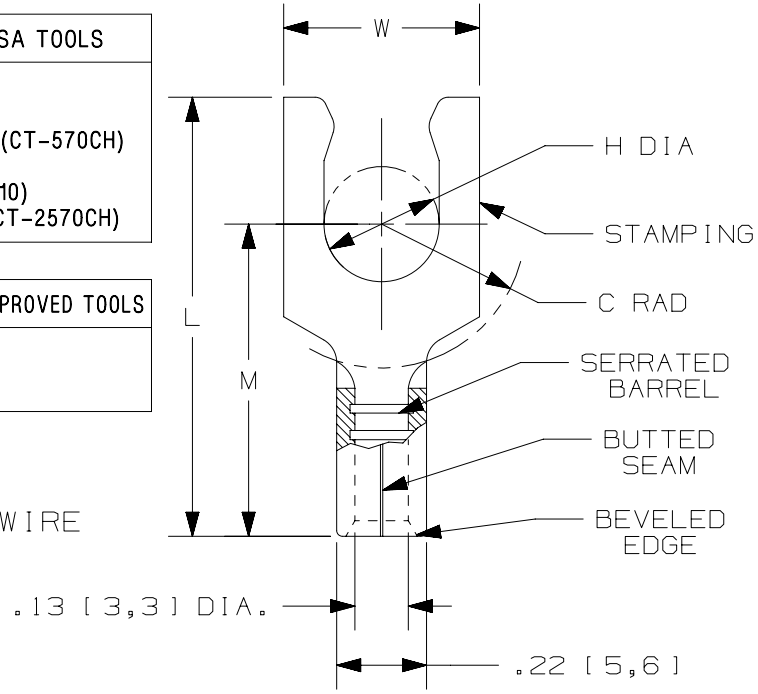

NOTES:

1. UL LISTED & CSA CERTIFIED FOR:
   A. #12-10 AWG [4,0-6,0mm²] SOLID OR STRANDED COPPER WIRE
   B. 302°F [150°C] MAX OPERATING TEMPERATURE
   C. 2000 VOLTS MAX
2. MATERIAL:
   A. STAMPING: .04" [1,0] THK COPPER, TIN PLATED
3. WIRE STRIP LENGTH: 9/32" $^{+1/32}_{-0}$ [7,1mm $^{+0,8}_{-0}$]
4. SEE www.panduit.com FOR PACKAGE QUANTITIES
5. DIMENSIONS IN BRACKETS ARE METRIC EQUIVALENT

c UL us
LISTED
587H
E52164

CSA
CERTIFIED
LR31212

REV	DATE	BY	CHK	APR	DESCRIPTION	ECN
00	2/18	JHNU	TMR	RGB	RELEASED	00123SH

TITLE
STRONGHOLD LOCKING FORK TERMINALS
NON-INSULATED, BUTTED SEAM, #12-10 AWG
CUSTOMER DRAWING

ITEM REVISION NAME: 00123SHQ/00
DATASET FILE NAME: 00123SHQ_DC/00

PANDUIT

UNLESS OTHERWISE SPECIFIED, DIMENSIONAL TOLERANCES ARE: IN [mm]
.X ± .XXX ±
.XX ± ANGLES ±
THIRD ANGLE PROJECTION

MATERIAL: SEE NOTES

DRAWING NUMBER: SH41287

DRAWN BY	DATE	CHK	SCALE	SHEET	SIZE
JHNU	2/18	TMR	N.T.S.	SHEET 1 OF 1	A

D10100DA/12